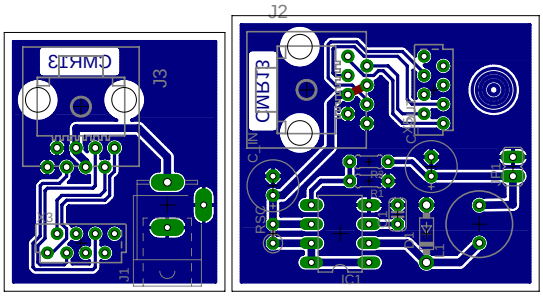
J2
J3
J1

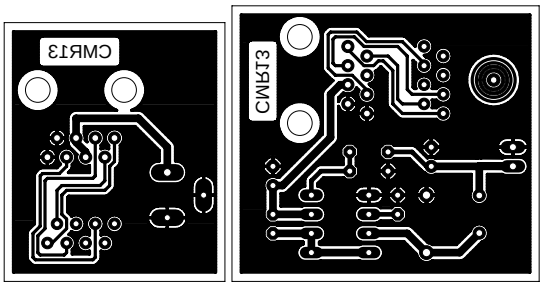

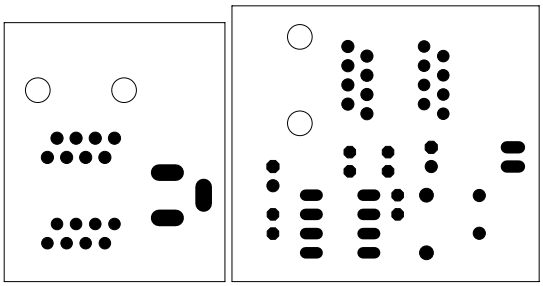

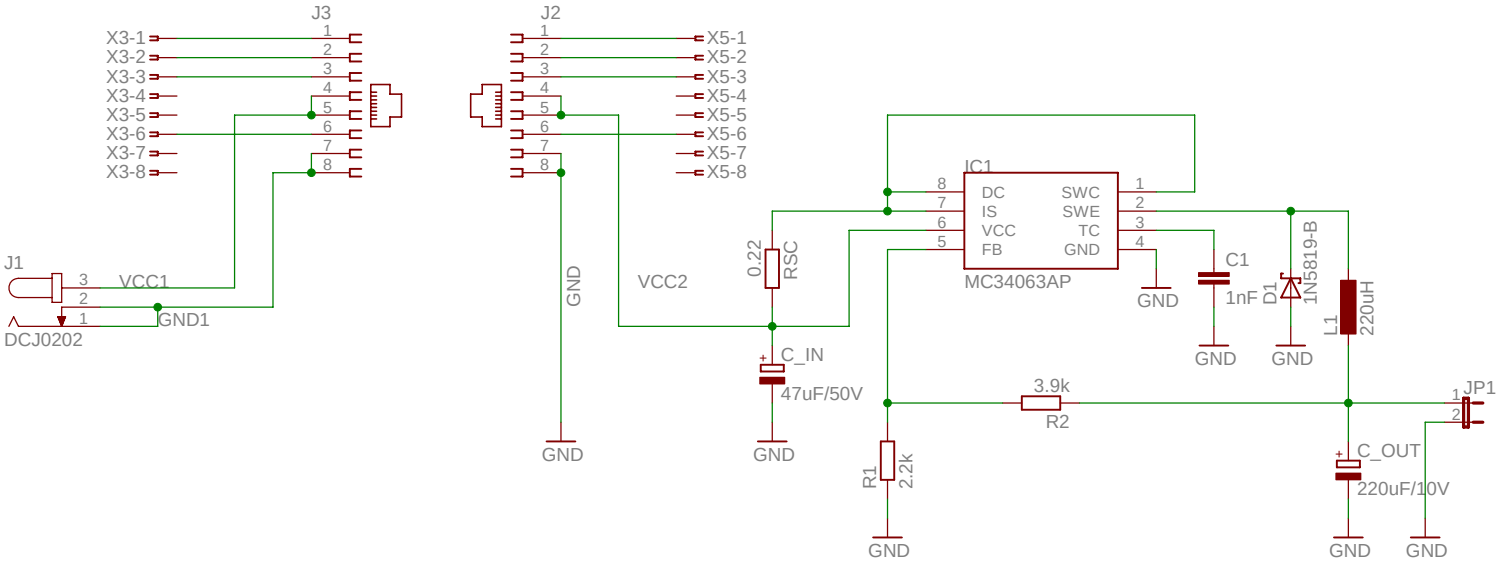
J3
X3-1
X3-2
X3-3
X3-4
X3-5
X3-6
X3-7
X3-8
J2
X5-1
X5-2
X5-3
X5-4
X5-5
X5-6
X5-7
X5-8
J1
VCC1
GND1
DCJ0202
GND
VCC2
0.22
RSC
C_IN
47uF/50V
GND
IC1
DC
IS
VCC
FB
SWC
SWE
TC
GND
MC34063AP
C1
1nF
D1
1N5819-B
L1
220uH
3.9k
R2
R1
2.2k
C_OUT
220uF/10V
JP1